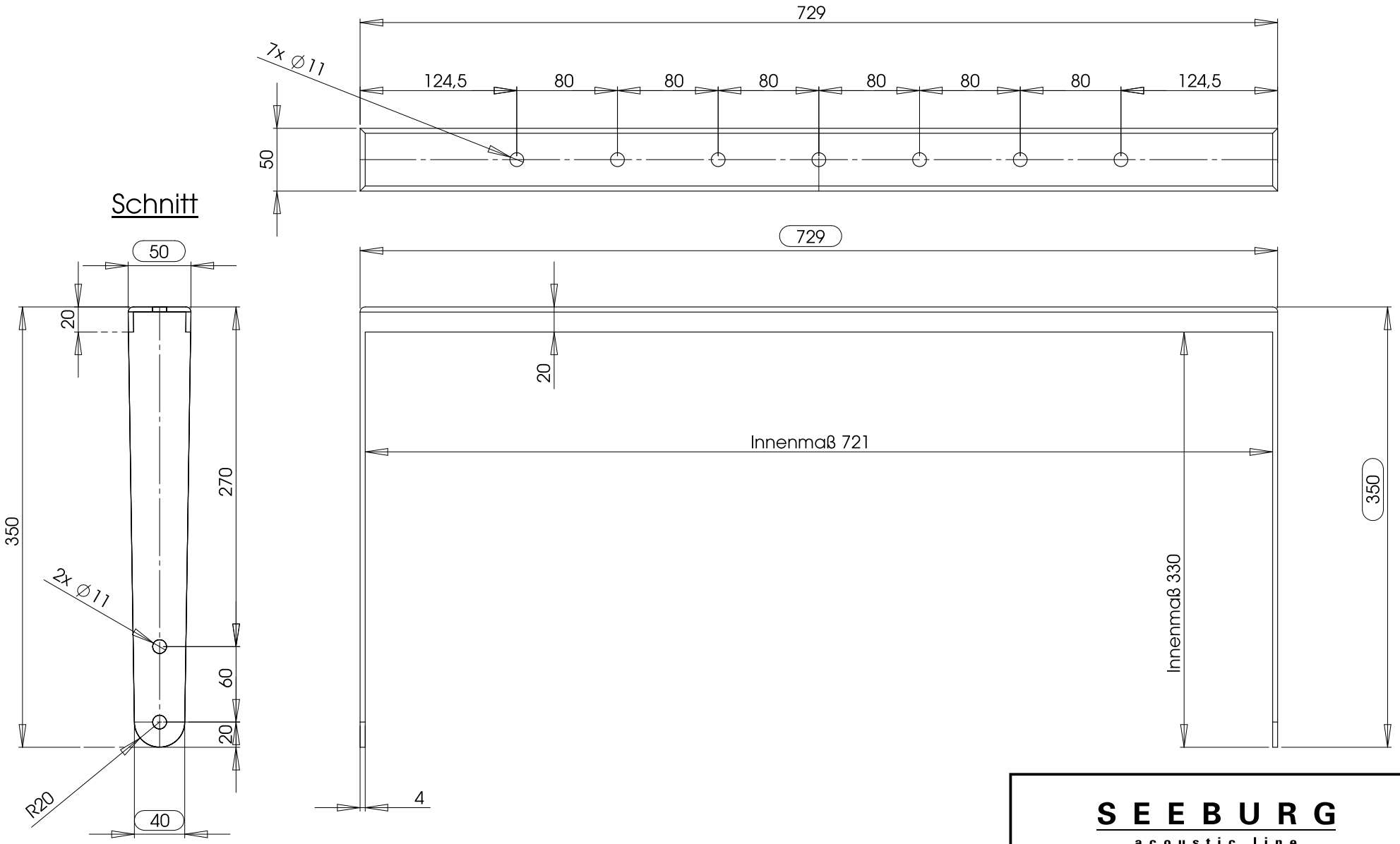

S E E B U R G
acoustic line

A8 / TSM15 Bracket horizontal alignment 01217H

copyright 01.2019

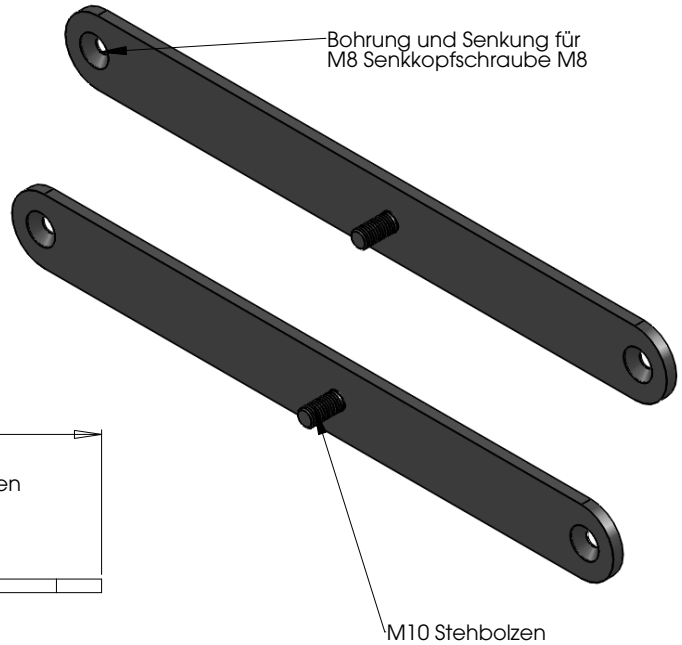

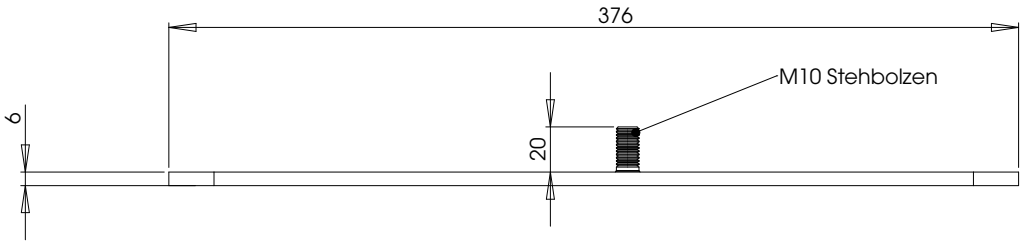

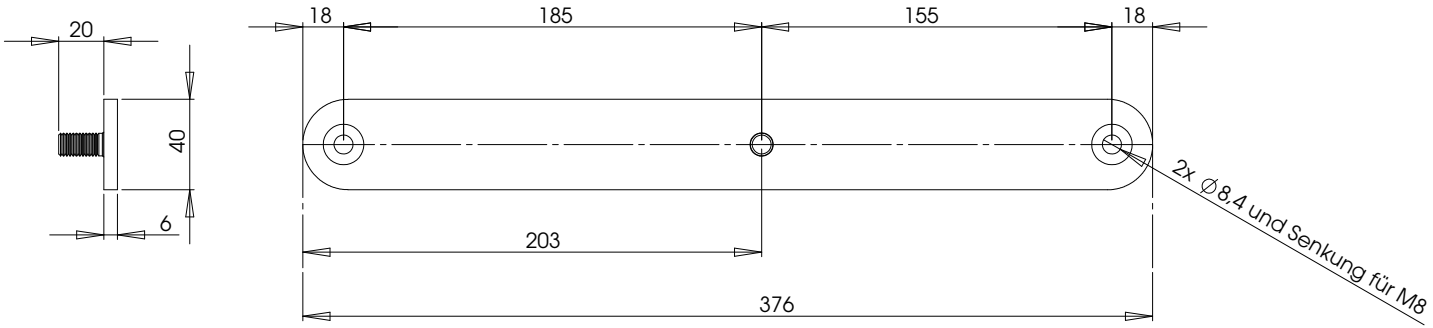

SEEBURG
acoustic line

A8 / TSM15 Bracket horizontal alignment 01217H

copyright 01.2019

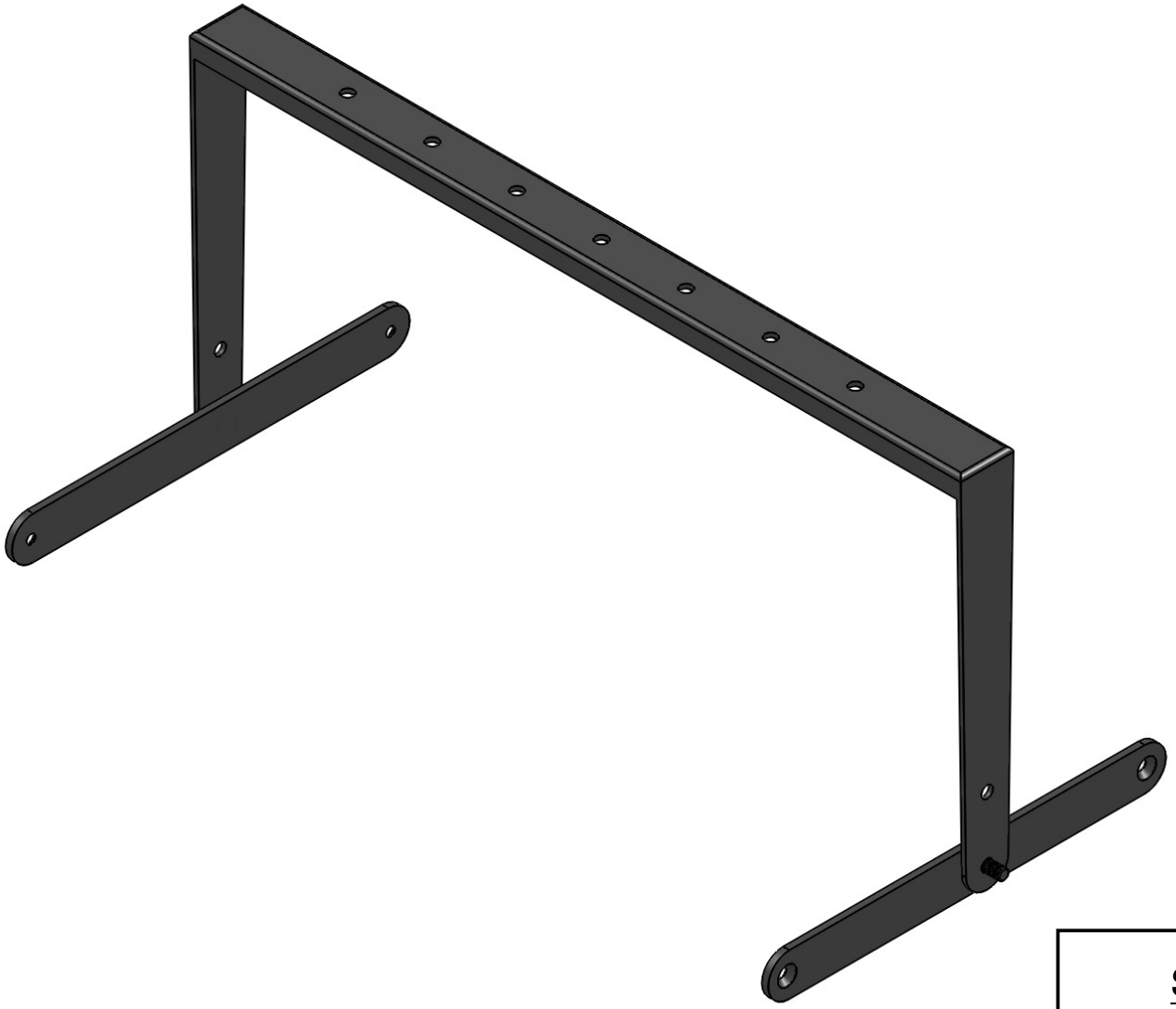

SEEBURG
acoustic line

A8 / TSM15 Bracket horizontal alignment 01217H

copyright 01.2019